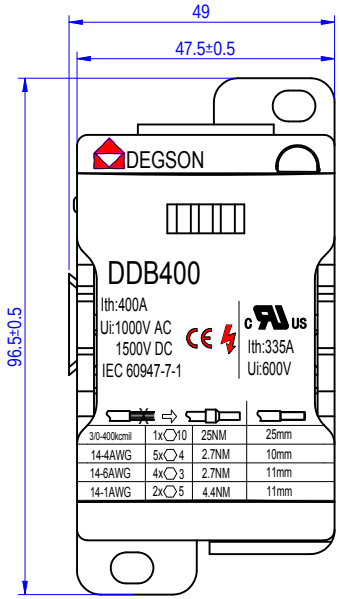

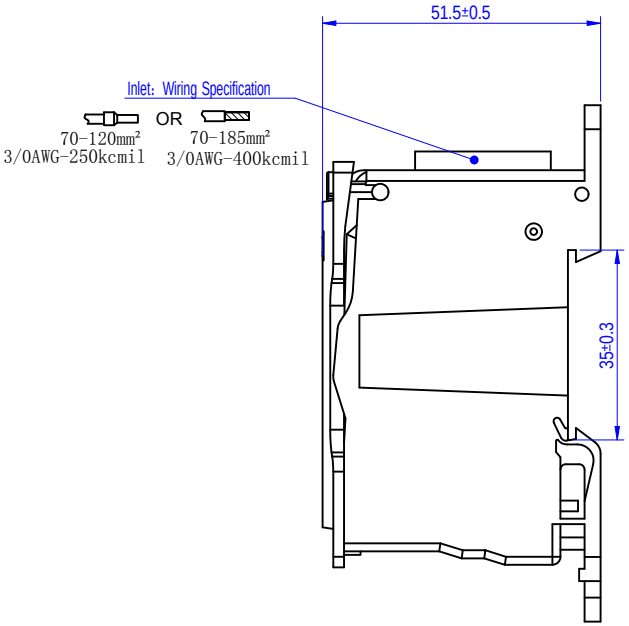

Note：Standard:IEC60947-1/ UL1059
1、Rated voltage：AC/DC 1000V(IEC)/ 600V(UL)
2、Rated current：400A(IEC)/ 335A(UL)
3、Withstand voltage: AC 1 minute 3000V no breakdown
4、Flame-retardant performance:：Glow wire test at 960°C, flame retardant (V-0)
5、Wire cross-section：Inlet：70-185mm²（3/0AWG-400kcmil）≤25Nm
Outlet：5x2.5-16mm²（14-4 AWG）≤2.7Nm
4x2.5-10mm²（14-6 AWG）≤2.7Nm
2x2.5-35mm²（14-1 AWG）≤4.4Nm
Detailed wiring specifications are shown in the illustration.
6、Installation method: TS35 DIN rail mounting or screw mounting
7、Material and Color:
Base: PA , off-white
Cover: PA, black
Marking Block: PA, brown, black, blue, gray, green, yellow
Conductive part: Copper (tin-plated)
Screws: Steel (zinc-plated)
8、Operating Ambient Temperature: -40 to +85°C
9、Assembly Method: Multi-unit combinable
10、Compliant with RoHS 2.0
11、Unit: Millimeter (mm)

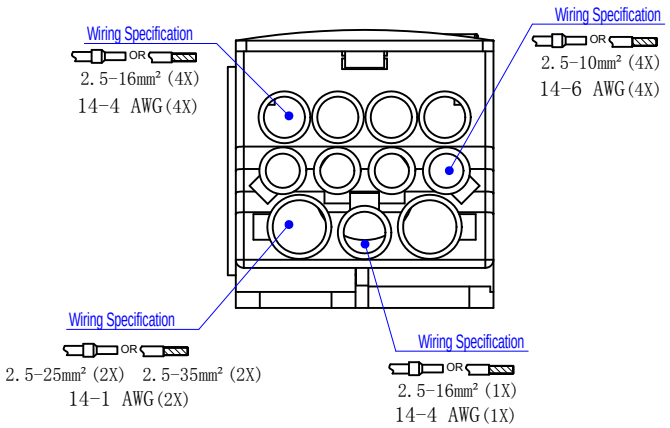

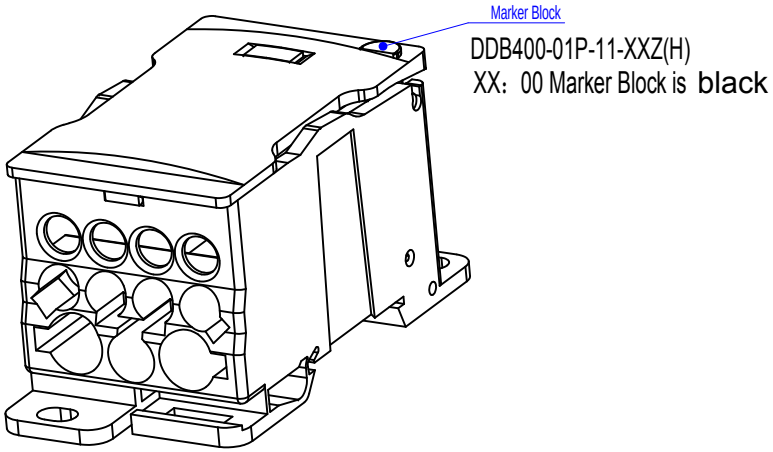

REV	ECN	DESCRIPTION	DRFT	DATE
01		Update drawing	黄仁锦	2026.03.27

DEGSON	MATERIAL:		SURFACE/COLOR:			
	MAT NO./REV: 11110000038-1 / 00.01		MAT STATUS: 小批量			
APPD: 彭敏 2026.03.27	NAME					
CHKD: 商卫国 2026.03.27	DDB400-01P-11-00Z(H)					
DRFT: 黄仁锦 2026.03.27	DRAWING NO.	TYPE	DRAWING STATUS	SCALE	SHEET	
A3 mm (inch)	200417687	CUSTOMER DRAWING	work	1:1	1/1	

Transfer or duplication of this document as well as the utilization or communication of its contents are prohibited unless explicit authorization is granted. Violations will be liable for compensation. All rights reserved for patent, utility model or design registrations. 除非经明确授权，否则禁止本文件的传送、使用或内容披露。违反者应赔偿损失。本公司保留所有发明专利、实用新型或外观设计专利的所有权利。