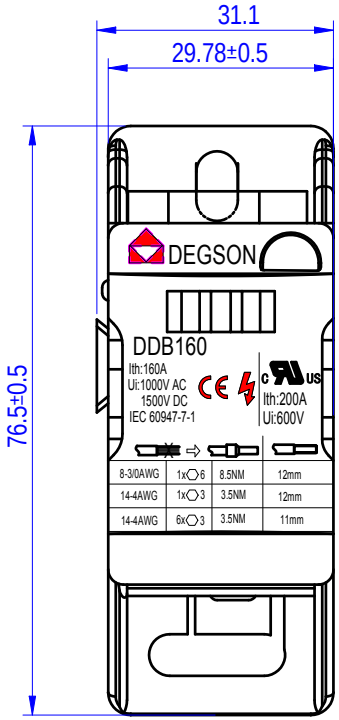

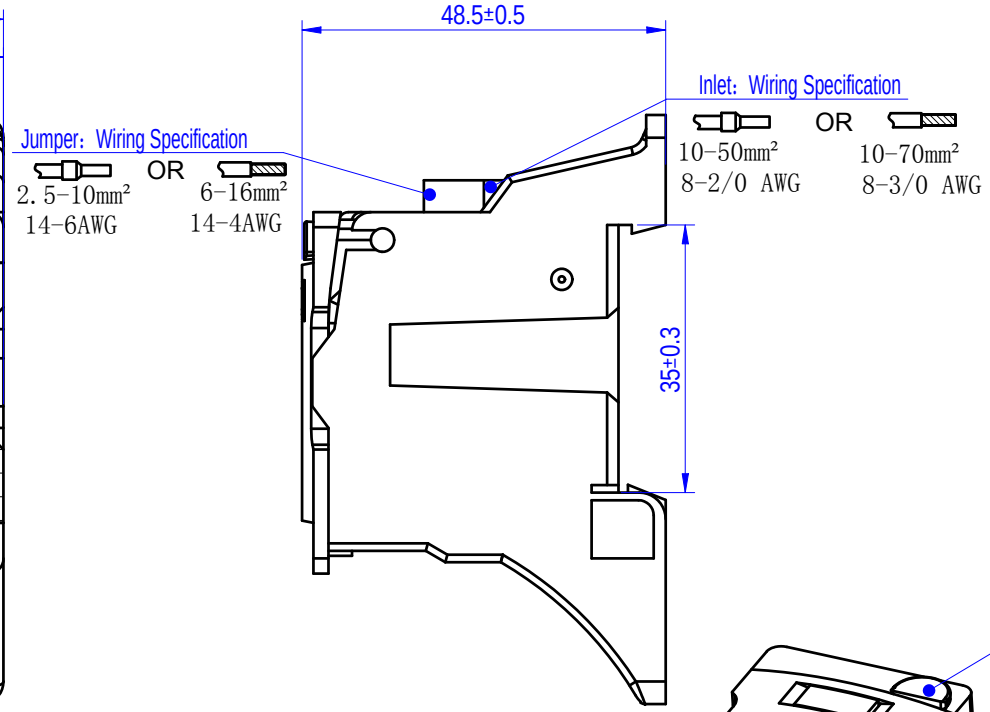

Note：Standard:IEC60947-1/ UL1059

1、Rated voltage：AC/DC 1000V(IEC)/ 600V(UL)
2、Rated current：160A(IEC)/ 200A(UL)
3、Withstand voltage: AC 1 minute 3000V no breakdown
4、Flame-retardant performance:：Glow wire test at 960°C, flame retardant (V-0)
5、Wire cross-section：Inlet：10-70mm²（8-3/0AWG） ≤8.5Nm
Outlet：6x2.5-16mm²（14-4 AWG）≤3.5Nm
Jumper：1x6-16mm²（14-4AWG）≤3.5Nm
Detailed wiring specifications are shown in the illustration.
6、Installation method: TS35 DIN rail mounting or screw mounting
7、Material and Color:
Base: PA , off-white
Cover: PA, black
Marking Block: PA, brown, black, blue, gray, green, yellow
Conductive part: Copper (tin-plated)
Screws: Steel (zinc-plated)
8、Operating Ambient Temperature: -40 to +85°C
9、Assembly Method: Multi-unit combinable
10、Compliant with RoHS 2.0
11、Unit: Millimeter (mm)

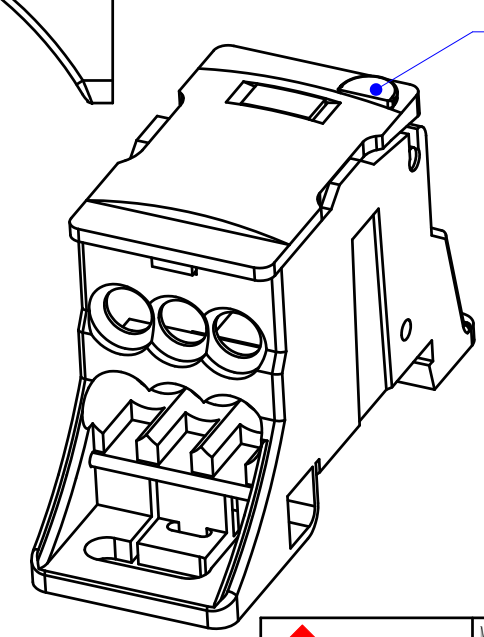

DDB160-01P-11-XXZ(H)

XX：00 Marker Block is **black**

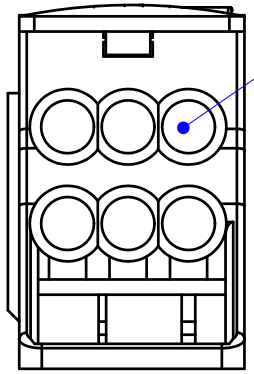

REV	ECN	DESCRIPTION	DRFT	DATE
01		Update drawing	黄仁锦	2026.03.27

APPD:	彭敏	2026.03.27
CHKD:	高卫国	2026.03.27
DRFT:	黄仁锦	2026.03.27

A4 mm (inch)

MATERIAL:
SURFACE/COLOR:
MAT NO./REV: 11110000035-1 / 00.01
MAT STATUS: 小批量
NAME: DDB160-01P-11-00Z(H)

DRAWING NO.	TYPE	DRAWING STATUS	SCALE	SHEET
200417750	CUSTOMER DRAWING	work	2:1	1/1

Transfer or duplication of this document as well as the utilization or communication of its contents are prohibited unless explicit authorization is granted. Violations will be liable for compensation. All rights reserved for patent, utility model or designs registrations. 除非经予明确授权，否则禁止转让、复制、利用、交流本文件的内容，侵犯者将负赔偿责任。本公司保留对涉及发明、实用新型和外观专利的所有权利。