SPECIAL FEATURES	
※ Universal AC input	※ High efficiency
※ Low output ripple	※ Built-in EMI filter
※ Short circuit protection	※ Over load protection

INPUT	
Input range	85 ～ 264 VAC
Input frequency	47 ～ 63 Hz
Inrush current	＜15A at 115VAC; ＜30A at 230VAC; cold start at 25℃
Input current	1.5A Max
Leakage current	＜0.5 mA at 50/60 Hz 264VAC input

OUTPUT								
Output voltage	**A** 12 V	**B** 9V	**C** 6V	**D** 5V	**E** 5V	**F** 16V	**H** 24V	**K** 14.2
Load Regulation	±4%							
Output current Rated output power	1A 12W	1A 9W	1.5A 9W	1.5A 6W	2A 10W	1A 16W	0.65A 15.5W	0.75A 10.5W
Output load efficiency	≥80% at 90VAC full load; ≥80% at 264VAC full load							
Adjustment range	fixed							
Hold-up time	30 ms at full load and 230 VAC nominal line							
OL protection	96% to 104% above peak rating							
Ripple & noise	≤100mV at rated load							
Short current	≤40mA at 250 VAC rated load							

ISOLATION	
Input to output	AC3.0 KV/1 min.

SAFETY APPROVAL
CE CCC UL

ENVIRONMENTAL	
Operating temp.	0 ℃ to 50 ℃ ambient derate each output at 4.0% per degree from 50 ℃ to 60 ℃
Storage temp.	- 40 ℃ to 85 ℃
Operating humidity	5% to 95% (non-condensing)
MTBF	100,000 hours at full load and 25 ℃ ambient conditions (demonstrated)
Size	65×52×29

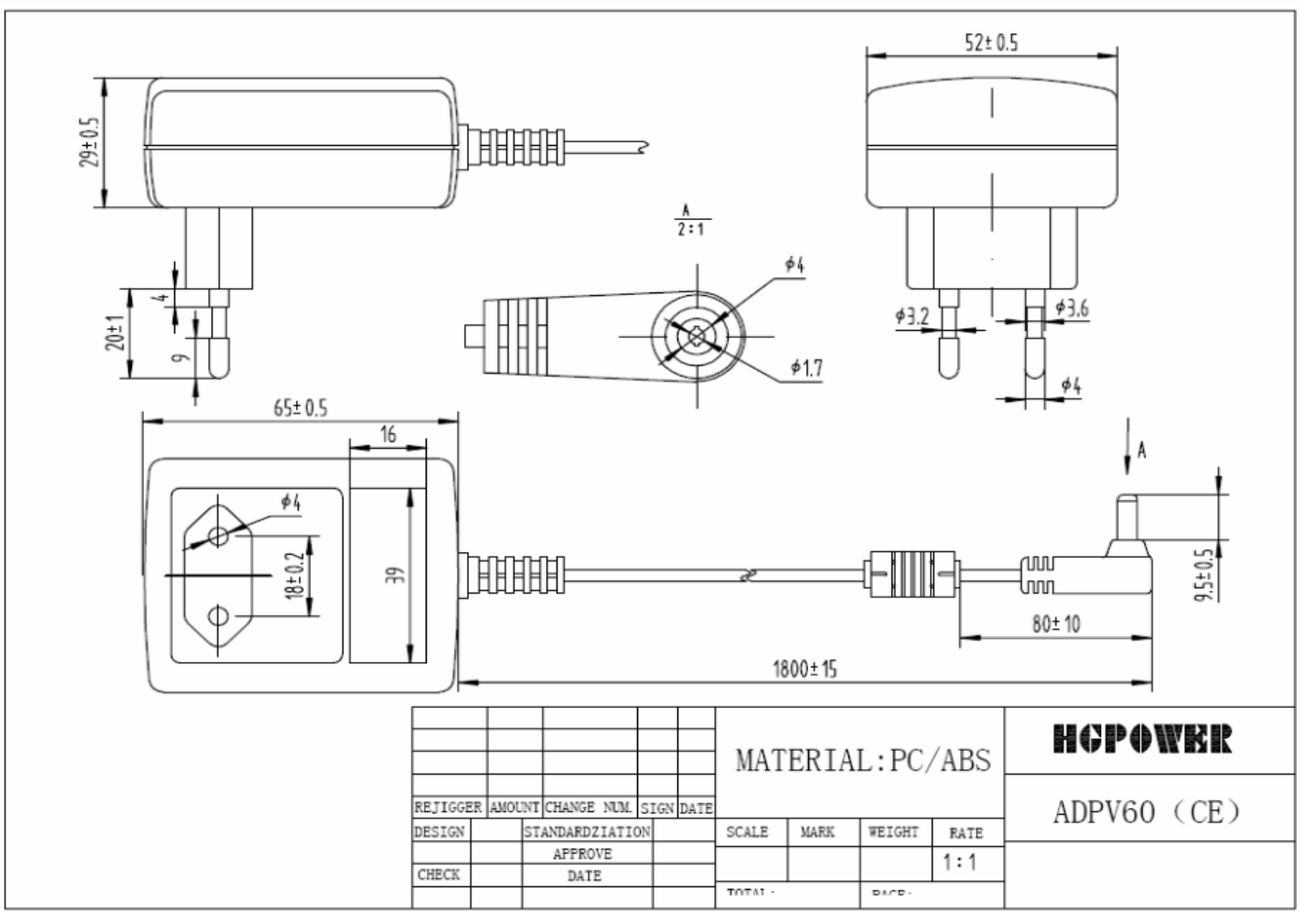

All public information web site belong to HG POWER copyright to any unit or individual may use and reprint Content
Copyright 2010 HG Power. All Right Reserved