SPECIFICATION

Contact Resistance: 35mΩ Max.
Insulation Resistance: 500MΩ Min.
Withstand Voltage: 500V DC/Min.

MATERIAL

Body: PC, UL94V-2
Contact: Brass, gold plated
Shell: Steel

ORDER INFORMATION

SQ A R X - 1010 A

- A: A Type
- X:
  - G0:Gold Flash
  - G1:Gold 3u"
  - G2:Gold 6u"
  - G3:Gold 10u"
  - G4:Gold 15u"
  - G5:Gold 30u"
- 1010: 1010:10P10C

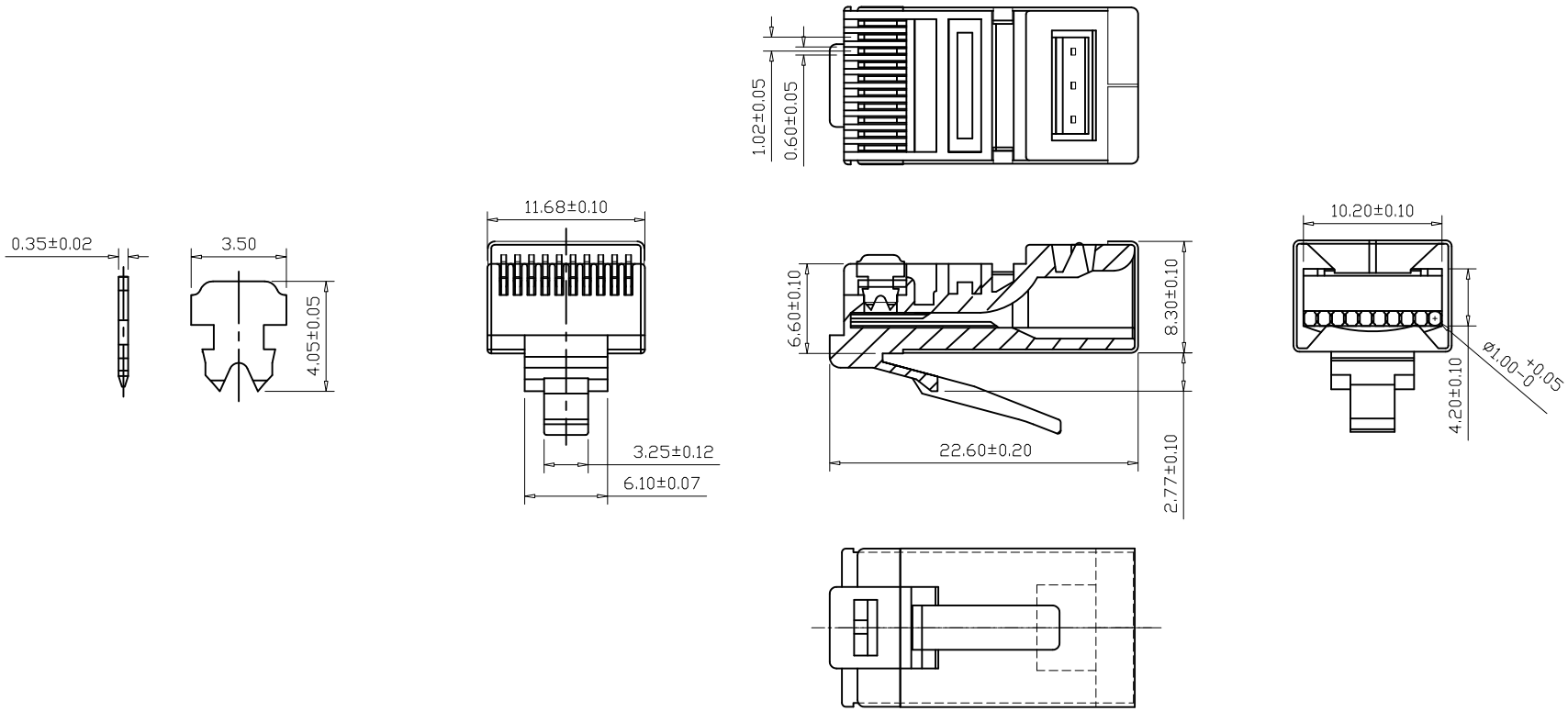

Morecrafts Technology
TEL: +886-2-2966-1326
FAX: +886-2-2966-1352
www.morecrafts.com.tw

PART NO.	SQARX-1010A	DRAWN	Andrew
DRAWING NO.	SQARX-1010A	CHECKED	Claudia
DATE	2022/10/04	APPROVED	Brian

TITLE:	REV.	TOLERANCE	SCALE	UNIT	NO.	DESCRIPTION	DATE
Plug 10 Position Long Type	A0	.X ±0.25 .XX ±0.20	1:1	mm			