MATERIAL & FINISH

Body: PC, UL94V-2 or UL94V-0, clean
Contact: Cooper Alloy, gold plated

ORDER INFORMATION

Q A F X - 44 A 10

- A: A Type
- F: F:Flat cable / R:Round cable
- X: G0:Gold Flash / G1:Gold 3u" / G2:Gold 6u" / G3:Gold 10u" / G4:Gold 15u" / G5:Gold 30u"
- 44: 44:4P4C
- A: A: 2 prong for stranded wire / V: 2 prong for stranded or solid wire / H: 3 prong for solid wire

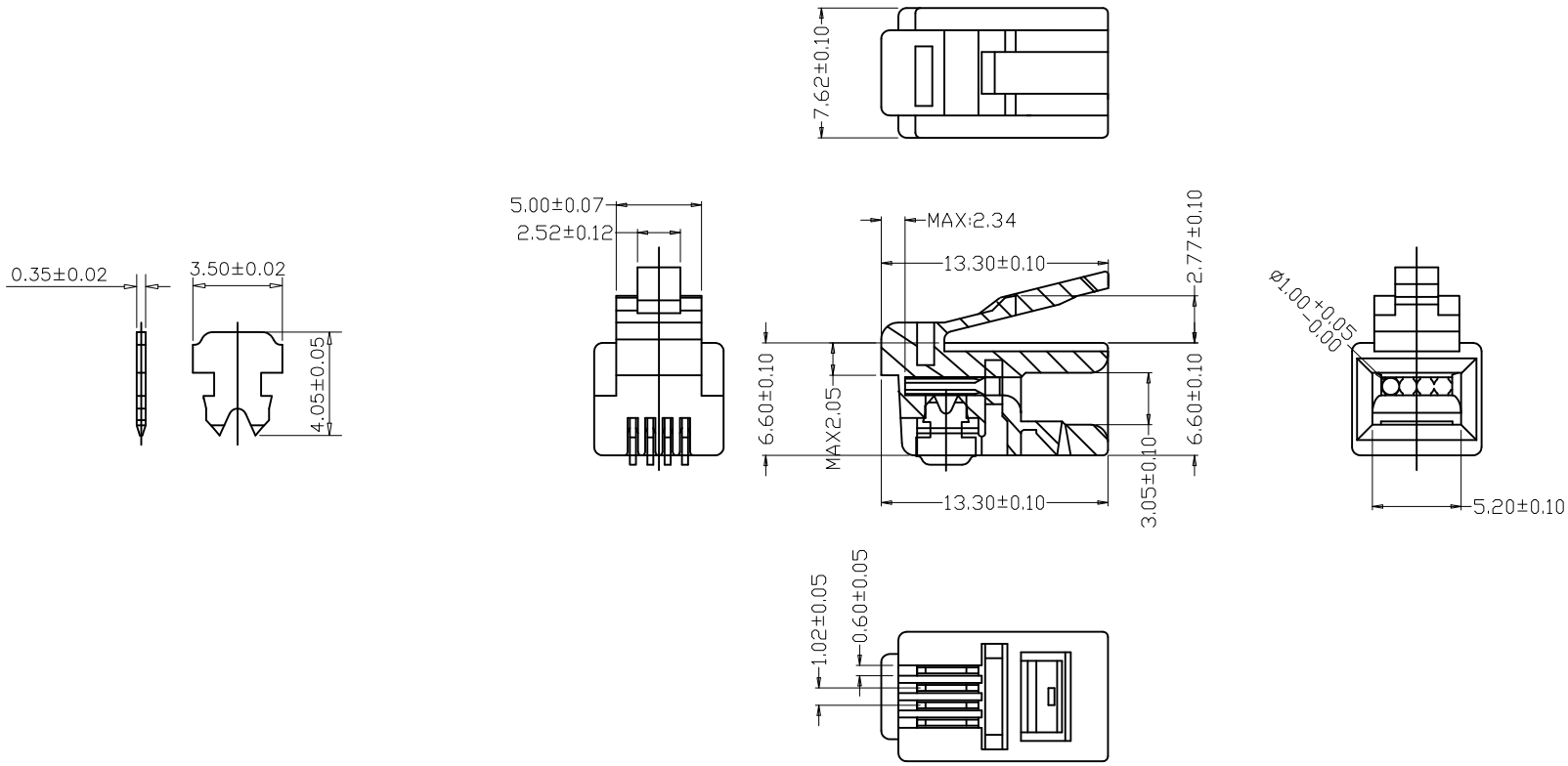

Morecrafts Technology
TEL: +886-2-2966-1326
FAX: +886-2-2966-1352
www.morecrafts.com.tw

PART NO.	QAFX-44A10	DRAWN	Andrew
DRAWING NO.	QAFX-44A10	CHECKED	Claudia
DATE	2022/07/13	APPROVED	Brian

TITLE:	REV.	TOLERANCE	SCALE	UNIT	NO.	DESCRIPTION	DATE
Plug 4 Position Short Type	A0	.X ±0.25 .XX ±0.20	1:1	mm			