MEC

APPROVAL SHEET

Product: Electret Condenser Microphone

Model	MD09765APN-50
Customer name	
Sensitivity	-38±2dB
Test Condition	4.5V 2.2KΩ

DESIGNED BY	William Liu
REVISED BY	George Liu
APPROVED BY	Geremy Feng
SUBMISSION DATE	2014/11/14

CUSTOMER:

P/N of Customer:

APPROVED BY	APPROVED DATE

Mobicon Holdings Limited
7/F., New Trend Centre, 704 Prince Edward Road East, San Po Kong, Kowloon, Hong Kong.
Tel: (852) 2397 6628 / 2397 8218; Fax: (852) 2397 0339 / 2397 8187
http://www.mobicon.com E-mail: info@mobicon.com

MOBICON Electronic Components

MEC

Customer: P/N: Smp No: Eng No:

ELECTRET CONDENSER MICROPHONE

- *MODEL:MD09765APN-50*
- *CUSTOMER:*

1. Electrical characteristics:

Directivity	Omnidirectional
Pb containation Requirement	Lead free
Charging type	Diaphragm
Sensitivity	-38± 2dB（0dB=1V/Pa，1KHz）
Output impedance	Low impedance
Standard operating voltage	4.5V
Operating voltage range	1V-10V
Current consumption	less than 500μA
Voltage deduction characteristic	Within 3dB at 4V
S/N Ratio	More than 60dB (SPL=1Pa, 1KHz, A-weighting)

2. Frequency Response and Schematic Diagram:

2.1 Typical Frequency Response Curve:

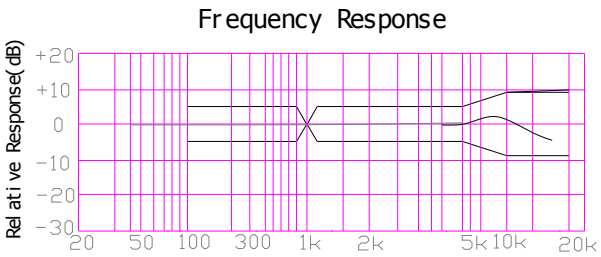

Microphone Response Tolerance Window

Frequency(Hz)	Lower Limit(dB)	Upper Limit(dB)
100	-5	5
200	-5	5
800	-5	5
1000	0	0
1200	-5	5
2000	-5	5
5000	-5	5
10000	-8	8

2.2 Schematic Diagram:

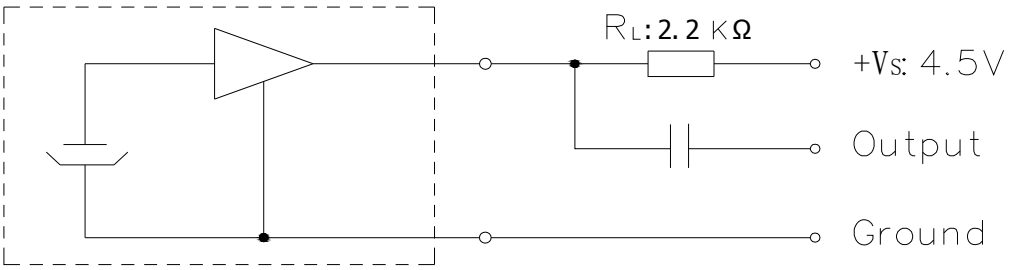

MOBICON Electronic Components

3. Mechanical characteristics:

3.1 Weight:Less than 0.8g

3.2 Dimension:

Unit:mm

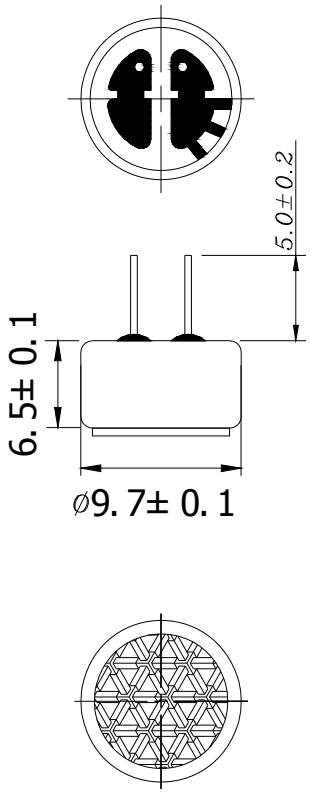

4. Soldering Condition

4.1 The soldering copper of a small type of 13～20W shall be applied.

4.2 The temperature of the working surface of the soldering copper shall be below 320℃.

4.3 ECM shall be soldered fixed on the metal block (heat sink), which has the higher radiation effects said heat sink shall contact with of ECM

4.4 The soldering time for each terminal shall be 1~2 sec.

4.5 The pinhole after soldering shall be avoided.

4.6 ECM may easily destroyed by the static electricity and the countermeasure for eliminating the static electricity (the ground for soldering copper, for worktable and for human body) shall be executed.

5. PACKAGING:

小包装	SMALL PACKET 100mm*100mm*12mm 100PCS/ INHALE SMALL BOX	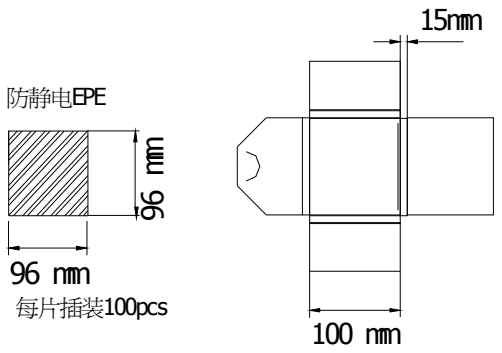
中包装	MID PACKET: 205mm*105mm*70mm 1000PCS/MID PACKET	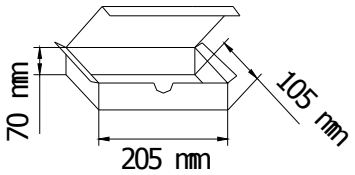 中包装盒(1000只)
大包装	PAPER CASE: 230mm*230mm*360mm 10000PCS/PAPER CASE	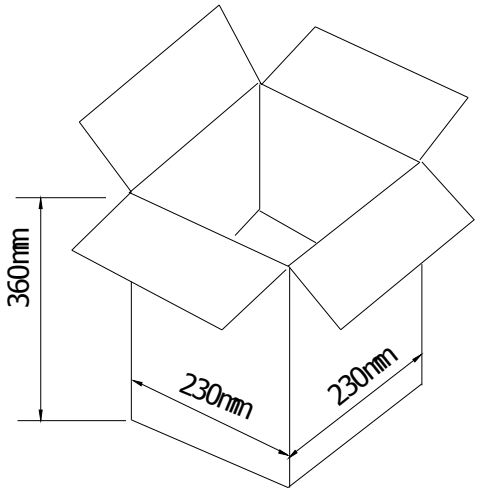 中包装箱(10000只)

6 .TEST SETUP DRAWING

5.1 Standard Frequency Response Test

Anechoic Room

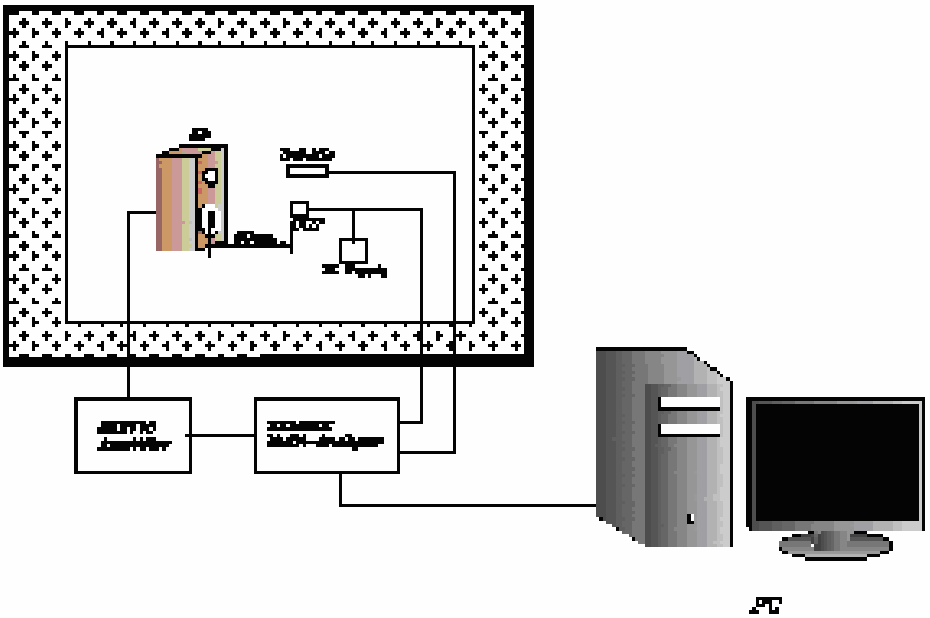

5.2 S/N Rastio Test

Anechoic Room

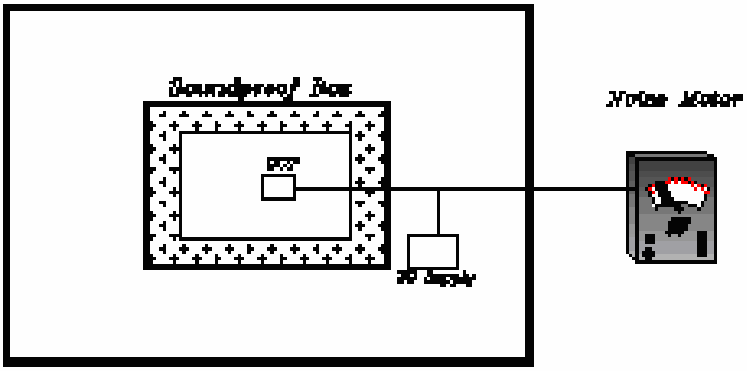

7. Reliablity test:

Item		Test condition	Evaluation
1	High temperature Test	The part shall be capable of with- standing a storage temperature of +70℃ for 200 hours.	After the test the ECM unit shall meet the requirement of no more than ±3dB variation from initial sensitivity after 2 hours recovering.
2	Low temperature Test	The part shall be capable of with- standing a storage temperature of -20℃ for 200 hours.	
3	Temperature cycle test	The part shall be subjected to 5 cycle. One cycle shall consist of (+70℃, 30min → Room temp(+20℃), 10min → -20℃ 30min → Room temp(+20℃), 10min)	
4	Humidity Test	The part shall be capable of with- standing a storage of humidity of 90～95% at the +40℃ for 200 hours.	
5	Drop Test	The microphone unit without package must be subjected to each 3 drops at three axises from the height of 1 meter to 20 mm thick hardwood board.	
6	Vibration Test	The microphone unit must be subjected to each 2 hours vibrations at three axises 2mm dynamic range, 10～50Hz/minute.	
7	Soldering Heat Resistance	Soldering iron of +330±5℃ should be placed on the terminal for 2±0.5 seconds.	

8. Drawing

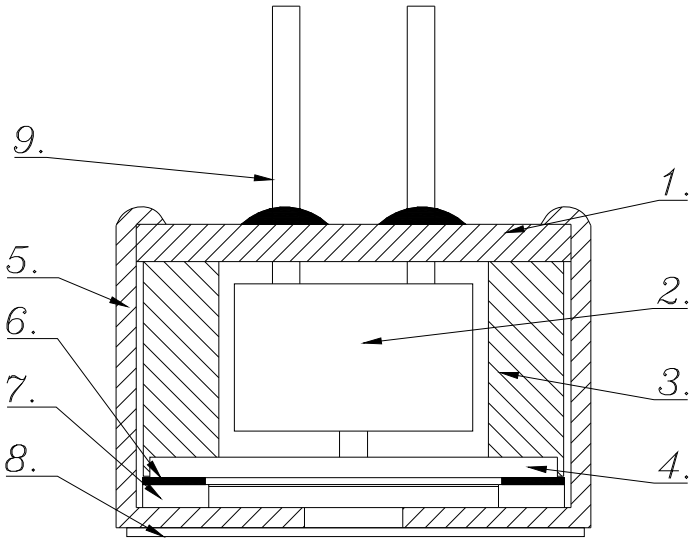

1	PCB	7	振膜
2	FET	8	防尘网
3	腔体	9	PIN
4	极板	10	
5	外壳	11	
6	垫片	12	

Mobicon Holdings Limited
7/F., New Trend Centre, 704 Prince Edward Road East, San Po Kong, Kowloon, Hong Kong.
Tel: (852) 2397 6628 / 2397 8218; Fax: (852) 2397 0339 / 2397 8187
http://www.mobicon.com E-mail: info@mobicon.com