MANTECH
ELECTRONICS (PTY) LTD
International Components Distributor

TEL JHB : (011) 493-9307
CAPE : (021) 535-3150
KZN : (031) 309-7692
FAX : (011) 493-9319
sales@mantech.co.za

INSTALLATION DIAGRAM

LOW BATTERY CUTOUT BOARD

15 May 2015 - REV 2.
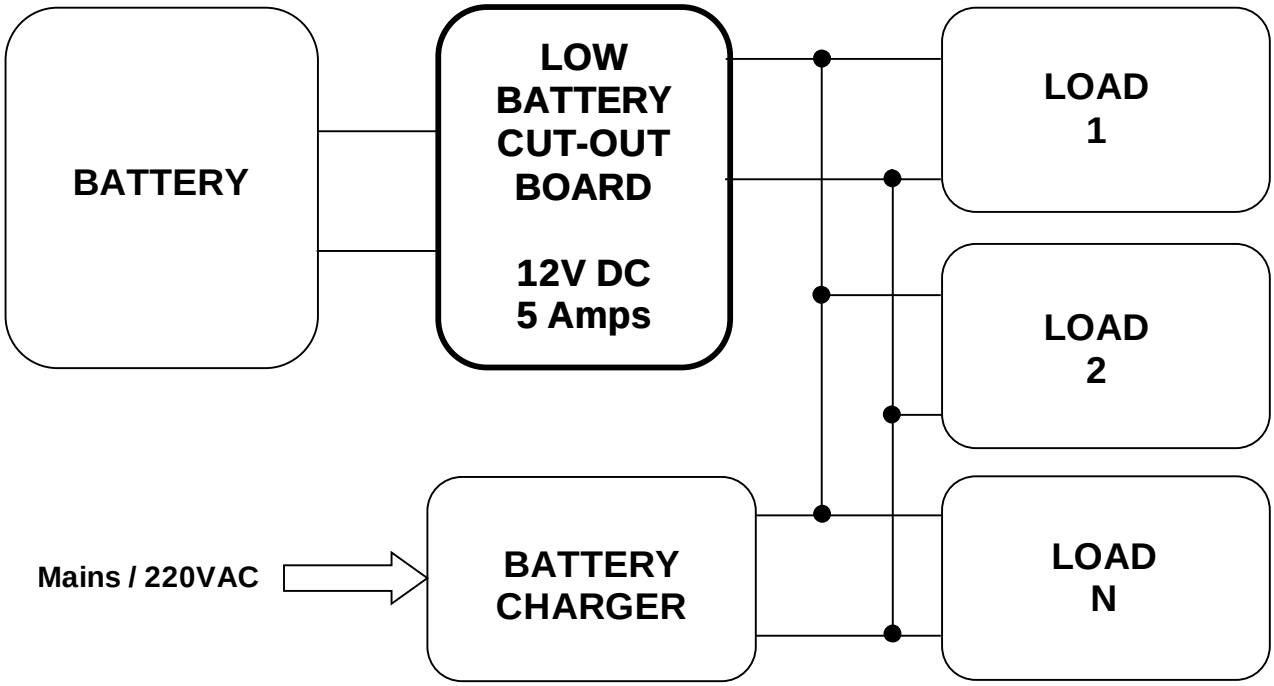
- Prevents battery from discharging completely.
- Automatically cuts power when battery voltage drops below 10.6 Volts.
- Automatically restores when power or charger voltage is re-applied.
- Current rating of 5A @ 12VDC.
  By using external relay, ratings can be increased.
- Physical size - 59mm x 40mm