38S6G5-600B-G24N

Shaft diameter:
6mm
轴直径尺寸：6mm

Working voltage:
5-24V
工作电压：5-24V

Shaft Diameter Type:
S Solid Shaft
轴径类型：S实心轴

Working phase number:
B: AB two phase
工作相数B：AB两相

Output mode:
N: Open collector output (NPN)
输出方式：
N：集电极开路输出（NPN）

Body outer diameter:
ϕ38mm
主体外径：直径38mm
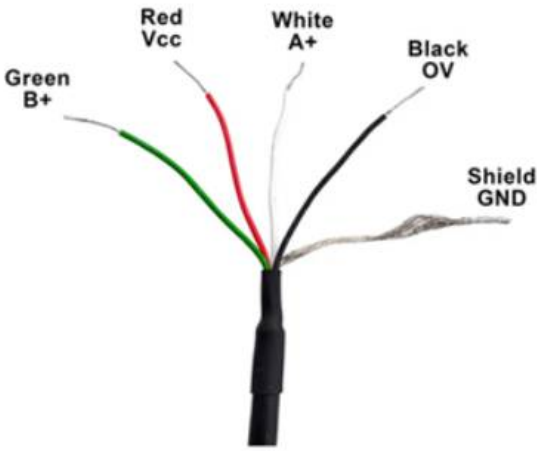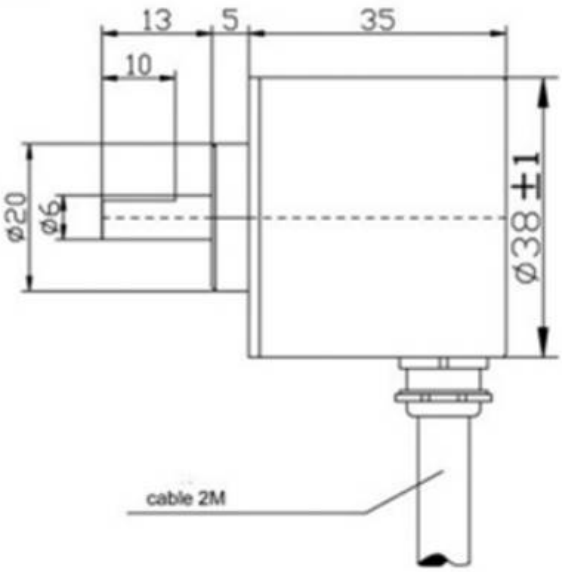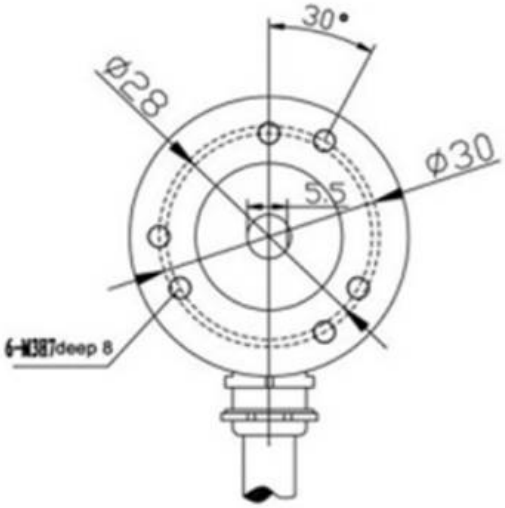
Pulses per revolution:
50/100/200/300/360/400
/500/600/800/1000/1200
/1500/1800/2000/2500/3600