REVISION RECORD				
REV	ECN	DESCRIPTION	DRFT	DATE

(W/O COVER)

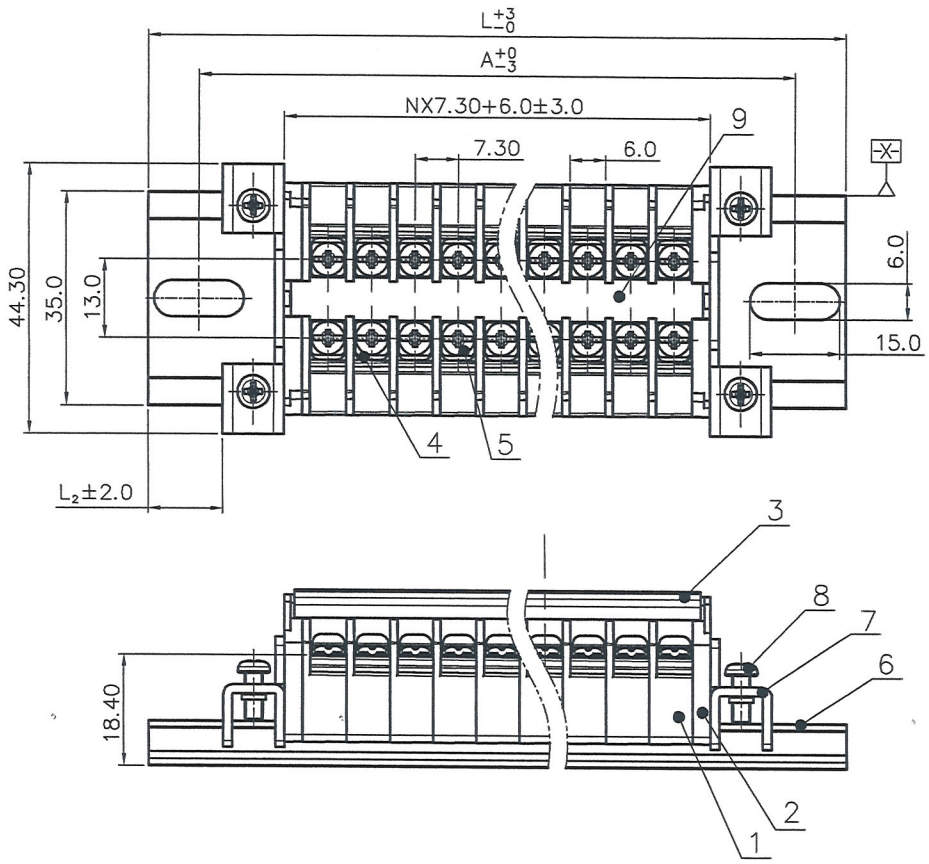

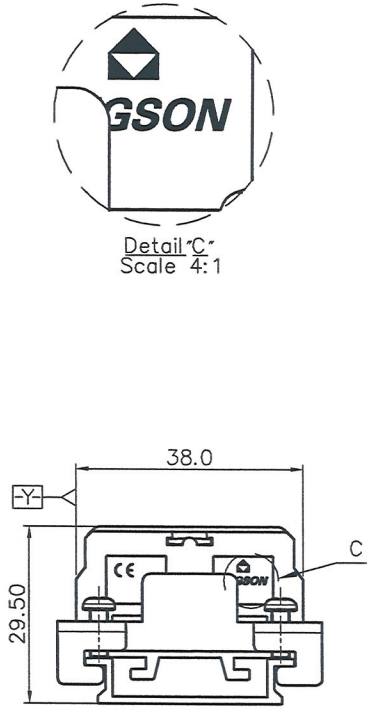

NOTES1:
UL Standard
1.Rated voltage/current : 600V / 10A
2.Torque value : M3 , 4.43Lb.in
3.Wire range : 24~16AWG

NOTES2:
1.Dimension shall be interpreted per ASME Y14.5-2009
2.Pitch : 7.30mm Poles: N=01-21P
3.Withstanding voltage : AC2200V/1Min
4.Operating temperature: -40°C~+125°C
5.Undimensioned tolerances:

Pitch Range In mm			Nominal Dimension Range In mm					— ⌒ ⌭
TO 6	Over 6 TO 10	Over 10 TO 24	TO 30	Over 30 TO 60	Over 60 TO 100	Over 100 TO 150	Over 150	0.1/10 ∠
±0.15	±0.20	±0.30	±0.30	±0.50	±0.70	±1.00	±1.30	±2°

6.RoHS Compliance

DGR10 - XXP - 1Y -10A (H)
- (Series No.)
- (Poles)
- (Single Pitch)
- (Color) 10A-(Standard)
- (H) (RoHS)

(Color): 1.(Grey) 2.(Blue) 3.(Black) 4.(Green) 5.(Orange) 6.(Red) 7.(Transparent) 8.(Yellow) 9.(White)

POLES	1	2	3	4	5	6	7	8	9	10	11	12	13	14	15	16	17	18	19	20	21
L	57	57	57	77	77	97	97	97	117	117	117	137	137	157	157	157	177	177	177	197	197
A	40	40	40	60	60	80	80	80	100	100	100	120	120	140	140	140	160	160	160	180	180
L_2	11.65	8.0	4.35	10.70	7.05	13.40	9.75	6.10	12.45	8.80	5.15	11.50	7.85	14.20	10.55	6.90	13.25	9.60	5.95	12.30	8.65

ITEM	NAME OF PART	MATERIAL	NOTES
9	Tag	PVC	UL94 V-2
8	Screw 2	Steel	M3/Zn Plated
7	Fastener	Steel	Zn Plated
6	Tramroad	AL	/
5	Screw 1	Steel	M3/Zn Plated
4	Current carrier	Copper alloy	Ni Plated
3	Cover	PC	UL94 V-2
2	Housing 2	PC	UL94 V-0
1	Housing 1	PC	UL94 V-0

文管中心 研究所 (仅限内部使用,外传无效)

DETACHED LISTS

PART NO.: /

APPD: 2018-7-20

CHKD: 2018.7.20

DRFT: GWG 2016.9.18

THIRD ANGLE PROJECTION

DEGSON® 宁波高松电子有限公司 NINGBO DEGSON ELECTRICAL CO., LTD

NAME: DGR10-XXP-1Y-10A(H)

TITLE: CUSTOMER DRAWING | REV: TO

DRAWING NO.: DGR10-C02 | SHEET: 1/1

MM (INCH) | DO NOT SCALE DRAWING | SCALE: 1:1