FOR-1351 Rev.1.0

REVISION RECORD				
REV	ECN	DESCRIPTION	DRFT	DATE

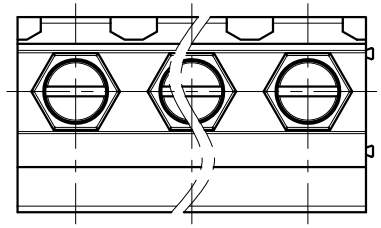

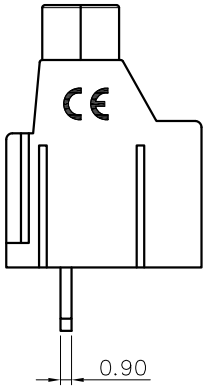

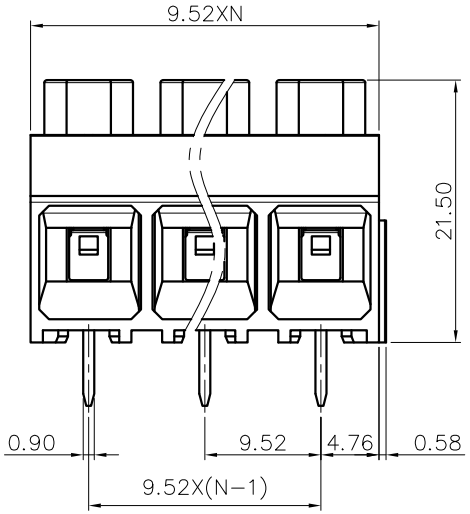

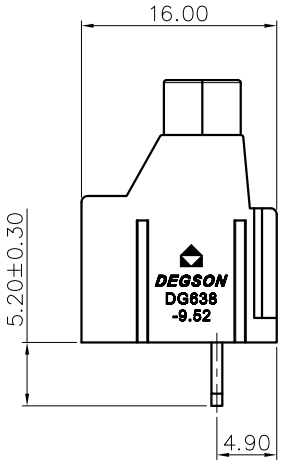

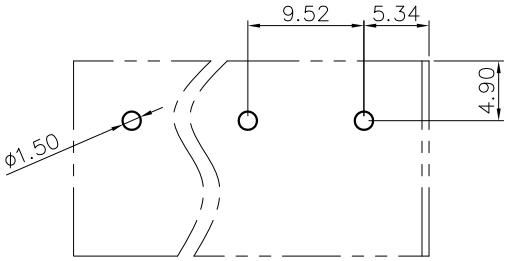

P.C.B LAYOUT

NOTES1:

UL Standard

1. Rated Voltage/Current : 300V / 30A
2. Withstanding Voltage : AC1600V/1Min.
3. Torque Value : M3.5 , 2P 4.43 Lb.in
   ≥3P 7.02 Lb.in
4. Wire Range : 30~10AWG

IEC Standard

1.

Pollution Degree	2	2	3
Overvoltage Category	II	III	III
Rate Impulse Voltage(KV)	6.0KV	8.0KV	8.0KV
Rate Voltage(V)	1000V	1000V	800V
Rate Current(A)	32A		

2. Torque Value : M3.5 , 2P 0.5 N.m
   ≥3P 0.8 N.m
3. Wire Range : 0.2~4.0mm^2

NOTES2:

1. Dimension shall be interpreted per ASME Y14.5-2009
2. Pitch : 9.52mm, Poles : N=02~16P
3. Stripping length : 7-8mm
4. Operating temperature: -40°C~+105°C
5. Undimensioned Tolerances:

Pitch Range In mm			Nominal Dimension Range In mm					— ⌒ ⌭
TO 6	Over 6 TO 10	Over 10 TO 24	TO 30	Over 30 TO 60	Over 60 TO 100	Over 100 TO 150	Over 150	0.1/10
								∠
±0.15	±0.25	±0.30	±0.30	±0.50	±0.70	±1.00	±1.30	±2°

6. RoHS Compliance

DG638 - 9.52 - XXP - 1Y - 00A (H)

(H) — (RoHS)

00A — (Standard)

(Series No.) (Pitch) (Poles) (Single Pitch)

(Color):1.(Grey) 2.(Blue) 3.(Black) 4.(Green) 5.(Orange) 6.(Red) 7.(Transparent) 8.(Yellow) 9.(White)

DETACHED LISTS	PART NO.: /	DEGSON® 宁波高松电子有限公司 NINGBO DEGSON ELECTRICAL CO., LTD	
	APPD: /	NAME: DG638-9.52-XXP-1Y-00A(H)	
	CHKD: /		
	DRFT: /	TITLE: CUSTOMER DRAWING	REV DO
	THIRD ANGLE PROJECTION	DRAWING NO.: /	SHEET 1/1
		MM (INCH) DO NOT SCALE DRAWING	SCALE 1:1