未注公差/General tolerances(mm)														
0 ~ 3	>3 ~ 6	>6 ~ 10	>10 ~ 18	>18 ~ 30	>30 ~ 50	>50 ~ 80	>80 ~ 120	>120 ~ 180	>180 ~ 250	>250 ~ 315	>315 ~ 400	>400 ~ 500	>500	0.1/10
±0.12	±0.18	±0.22	±0.26	±0.31	±0.37	±0.57	±0.80	±0.93	±1.05	±1.15	±1.60	±2.20	±2.50	±2°

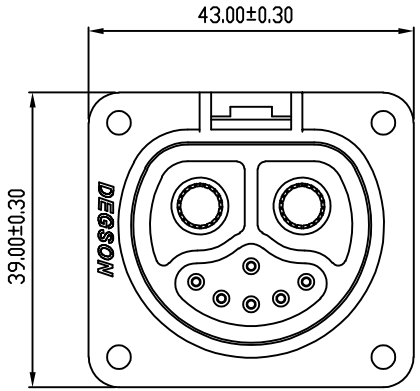

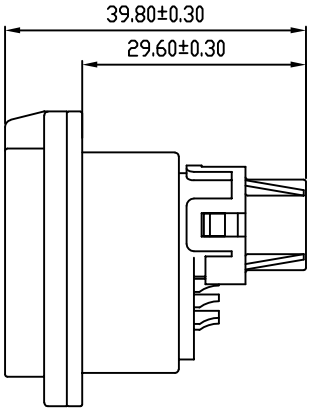

型号说明

SA-EBBH-2006-F-00A(H)

- 插座
- 组装式
- 系列名称
- 产品插针数量 功率针2pin, 信号针6pin
- 母端
- 通用型环保产品

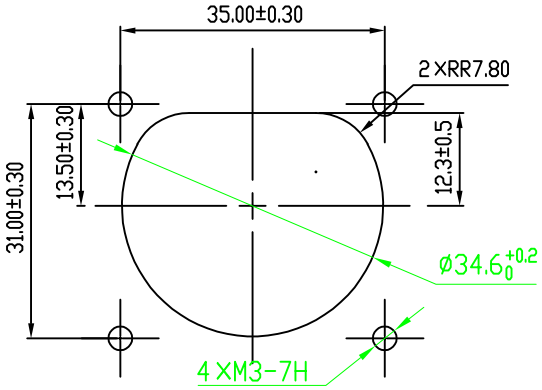

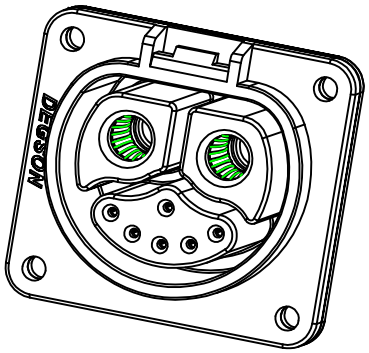

额定电压电流/Rated Voltage/Current	72VDC/100A
绝缘电阻/Insulation resisance	≥500MΩ
插拔次数/Mechanical working life(mating cycles)	3000
耐电压/Withstanding voltage	1500V AC
使用温度范围/Operating temperature(°C)	-40~+105
防水等级/Levels of protection	/
接线方式/Terminal	Crimping
导线规格范围/Wire range(mm)	Power:4~6AWG

AO					
T0					
REV	ECN	DESCRIPTION	DRFT	DATE	

MATERIAL: / SURFACE: /

MAT NO.:

STATUS: /

APPD:

CHKD:

DRFT: Eric 2021.10.13

DEGSON® 宁波高松电子有限公司 NINGBO DEGSON ELECTRICAL CO., LTD

NAME: SA-EBBH-2006-F-00A(H)

DRAWING NO.: REV T0

SIZE: A4 mm (inch) TYPE: CUSTOMER DRAWING SCALE: 2:1 SHEET 1/1

Transfer or duplication of this document as well as the utilization or communication of its contents are prohibited unless explicit authorization is granted. Violations will be liable for compensation. All rights reserved for patent, utility model or designs registrations. 除非给予明确授权，否则禁止转让、复制、利用、交流本文件的内容。侵犯者将负赔偿责任。本公司保留对涉及发明、实用新型和外观专利的所有权利。