Transfer or duplication of this document as well as the utilization or communication of its contents are prohibited unless explicit authorization is granted. Violations will be liable for compensation. All rights reserved for patent, utility model or designs registrations. 非给予有偿授权，否则禁止转让、复制、利用、交流本文件的内容，侵犯者将负赔偿责任。本公司保留对涉及发明、实用新型和外观专利的所有权利。

Dimensional tolerance(mm)					Length tolerance(mm)				
0 ~ 30	>30 ~ 60	>60 ~ 100	>100 ~ 150	>150	0 ~ 5000	5000 ~ 10000	10000 ~ 30000	>30000	0.10/10
±0.25	±0.35	±0.55	±0.80	±1.10	±55	±105	±205	±505	±2°

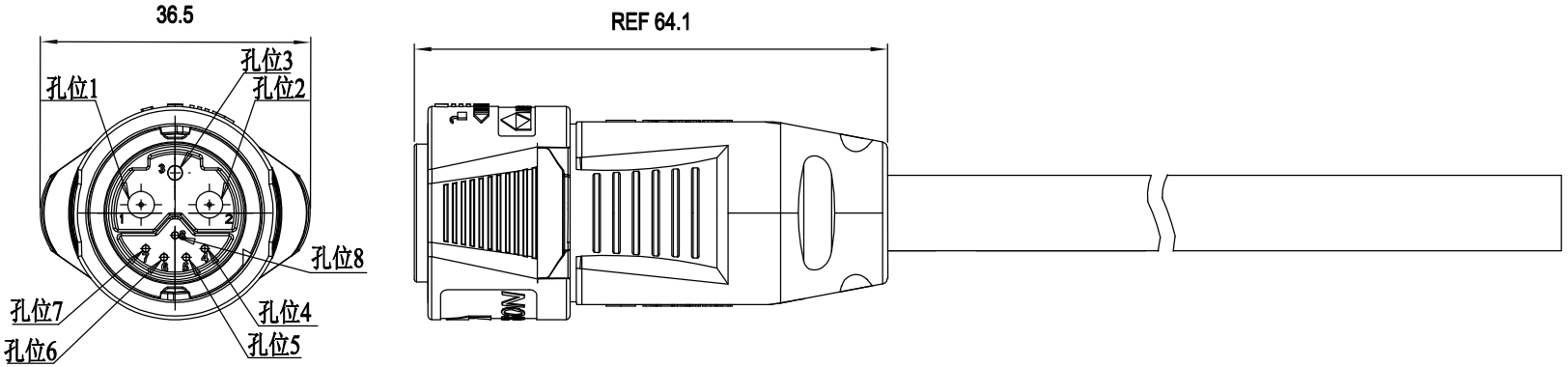

技术要求/Technical requirements:	
额定电压电流/Rated Voltage/Current	110V /30A(max)
绝缘电阻/Insulate Resistance	≥100MΩ
耐压/Withstanding Voltage	500V AC
防护等级/Ingress Protection	IP67
插拔寿命/Insertion/Pullout Times	3,000 Times
使用温度范围/Operating temperature(°C)	-40℃~+105℃
接线方式/Terminal	Soldering
导线外径范围/Wire range(mm)	Ø11±0.3

DEGSON

MATERIAL: 材质		SURFACE: 表面处理	
MAT NO./REV: 物料编码	/ 版本	MAT STATUS: 物料状态	
NAME	EBBL直插头		
APPD:			
CHKD:			
DRFT:			

图纸版本	ECN	变更描述	设计人	设计日期	A4	mm (inch)	DRAWING NO.	TYPE	DRAWING STATUS	SCALE	SHEET
REV	ECN	DESCRIPTION	DRFT	DATE			图号	图纸类型	图纸状态	1:1	1/ 1