未注公差/General tolerances(mm)														
0 ~ 3	>3 ~ 6	>6 ~ 10	>10 ~ 18	>18 ~ 30	>30 ~ 50	>50 ~ 80	>80 ~ 120	>120 ~ 180	>180 ~ 250	>250 ~ 315	>315 ~ 400	>400 ~ 500	>500	0.05/10
±0.08	±0.12	±0.18	±0.22	±0.26	±0.31	±0.37	±0.57	±0.80	±0.93	±1.05	±1.15	±1.60	±2.20	±1°

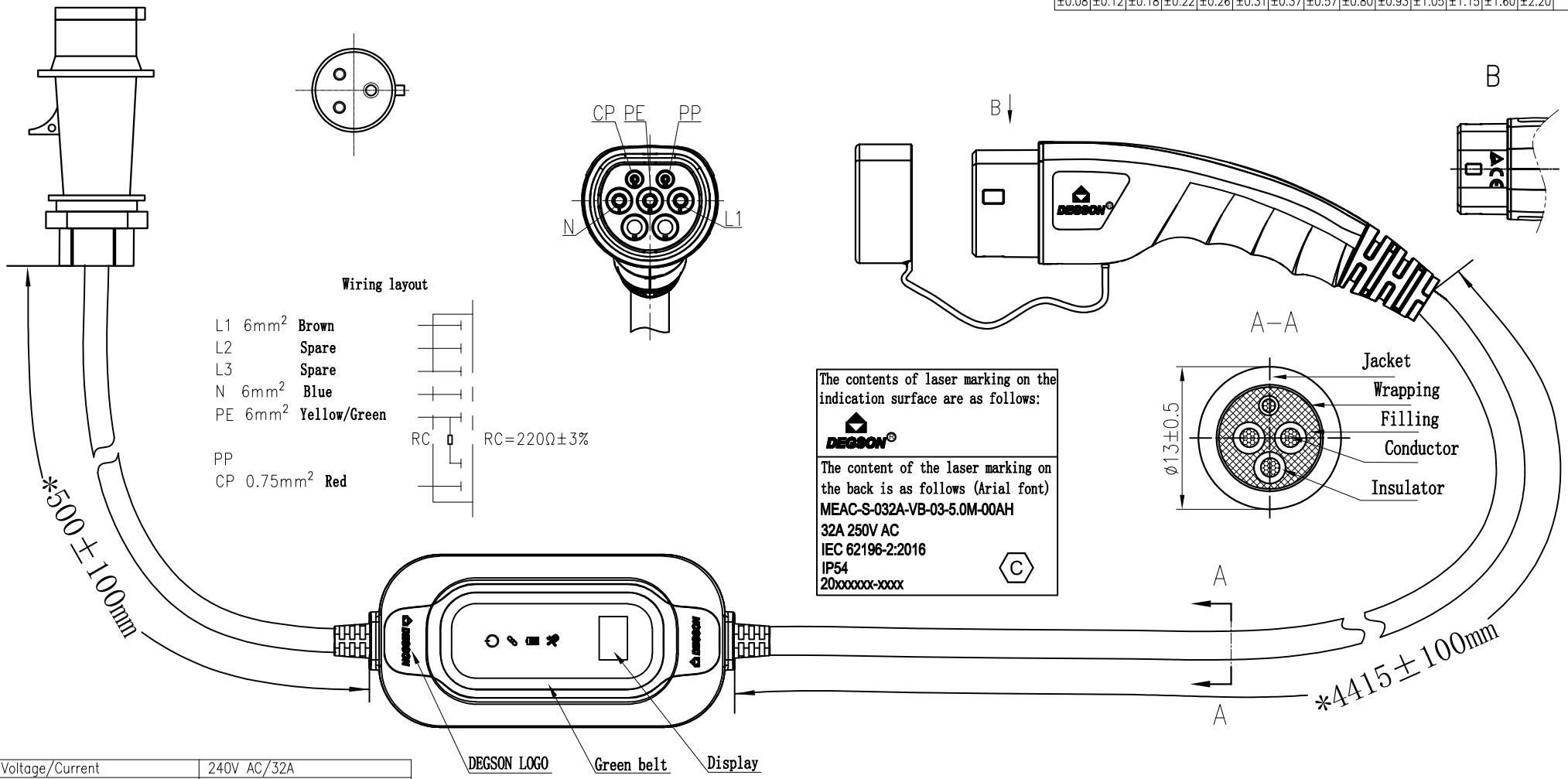

The contents of laser marking on the indication surface are as follows:

DEGSON®

The content of the laser marking on the back is as follows (Arial font)

MEAC-S-032A-VB-03-5.0M-00AH
32A 250V AC
IEC 62196-2:2016
IP54
20xxxxxx-xxxx

Rated Voltage/Current	240V AC/32A
Insulate Resistance	>5MΩ,500V DC 1min
Withstanding Voltage	L、N and PE ,2500V AC 1min
	L and N ,2500V AC 1min
Ingress Protection	IP65(IC-CPD)
Insertion/Pullout Times	10,000 Times
Insertion/Pullout Force	<75N
Operating temperature(°C)	-30~+50
RCD Protection	Type B
Packaging specification	SOP-Y-3166
Cable specification	3*6mm²+1*0.75mm² Black
Reference standard	IEC 62196-1/2 IEC 61851
Key controlled symbol	*

REV	ECN	DESCRIPTION	DRFT	DATE

DEGSON

APPD:	Knight	2023.05.19
CHKD:	Eric	2023.05.19
DRFT:	Li P	2023.05.19

A4 mm (inch)

MATERIAL: | SURFACE/COLOR:
MAT NO./REV: 22020000457 / 00 | MAT STATUS: ***

NAME: MEAC-S-032A-VB-03-5.0M-00A(H)

DRAWING NO.	TYPE	DRAWING STATUS	SCALE	SHEET
	CUSTOMER DRAWING		1:3	1/1

Transfer or duplication of this document as well as the utilization or communication of its contents are prohibited unless explicit authorization is granted. Violations will be liable for compensation. All rights reserved for patent, utility model or designs registrations. 除非给予明确授权，否则禁止转让、复制、利用、交流本文件的内容。侵犯者将负赔偿责任。本公司保留对专利及设计、实用新型和外观专利的所有权利。