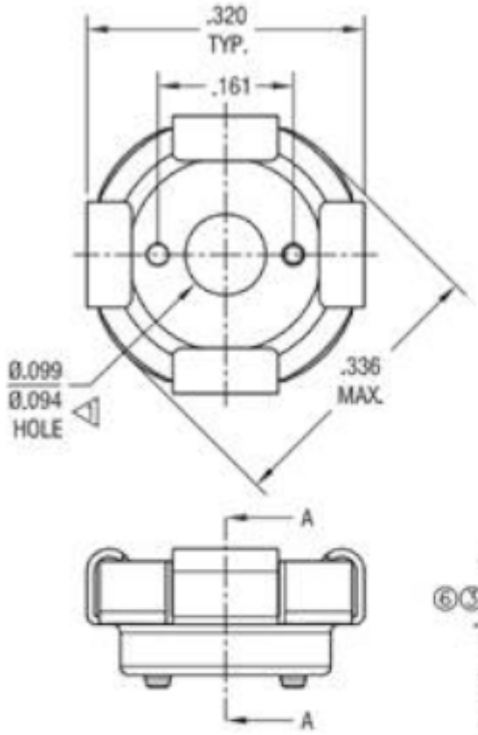

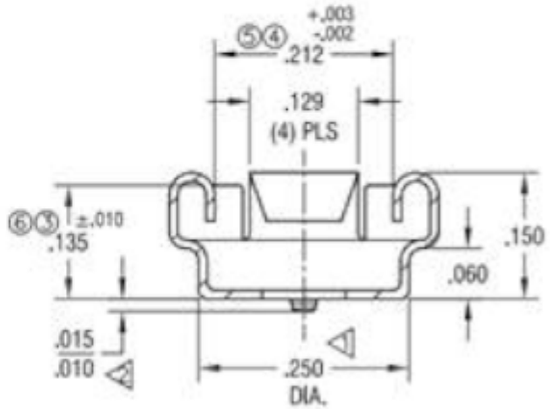

SECTION A-A

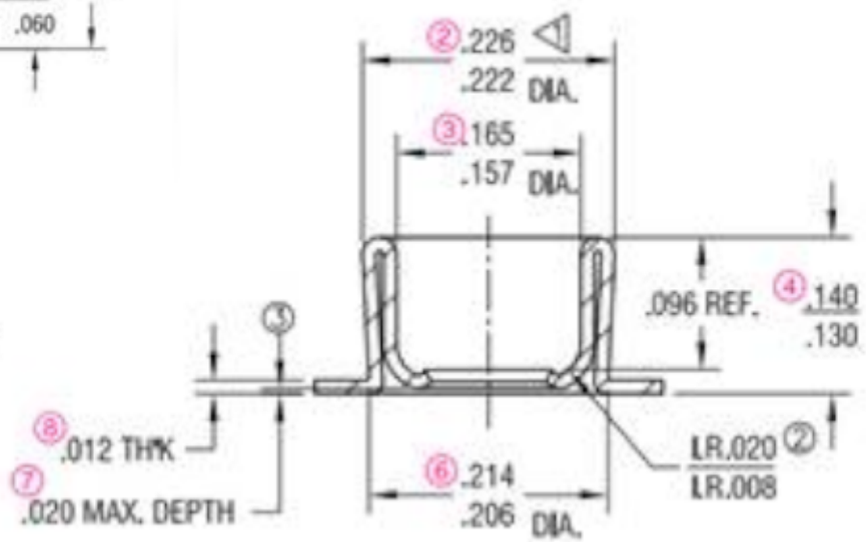

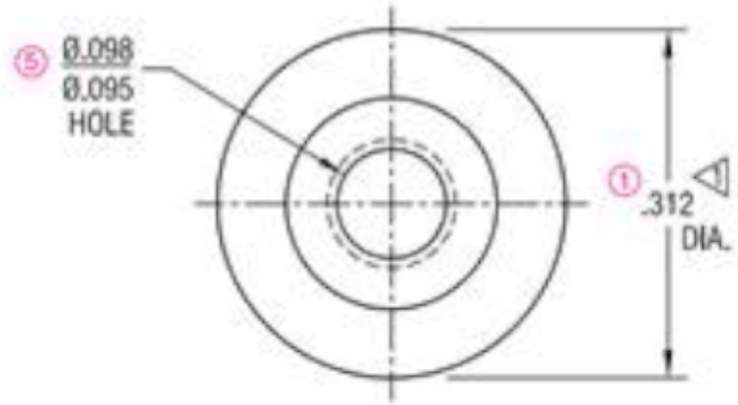

NOTE:

1. .094/.099 DIA. MUST BE CONCENTRIC WITH .250 DIA. WITHIN .005 (.010 T.I.R.)
2. RANDOM LOCATION OF 2 DIMPLES RELATIVE TO 4 TABS PERMISSABLE.
3. HEAT TREAT TO SPRING TEMPER ROCKWELL C36-39.
4. FINISH: ELECTROLESS NICKEL PLATE .00020/.00050 THK

NOTE:

1. .312 DIA. & .226/.222 DIA. MUST BE CONCENTRIC WITH .098/.095 DIA. HOLE TO WITHIN .010 T.I.R.
2. FINISH: ELECTROLESS NICKEL PLATE .00020/.00050 TH'K